JENSEN

MODEL

541

INSTRUCTION BOOK

Handbook of Instructions

FOR THE

JENSEN

MODEL

541

This handbook is published for the use and assistance of owners of JENSEN CARS. It embodies in a concise form the advice and suggestions of the Company's Technical Staff in regard to lubrication, general care, and maintenance, together with supplementary information regarding the necessary adjustments which may be required from time to time.

PRICE 12/6 NETT

Compiled and Published by

JENSEN MOTORS LTD.

WEST BROMWICH

ENGLAND

Telephones :
W.B. 1112-2-3

Telegrams :
" Expert "

Chassis No. .....

Engine No. .....

Registration No. .....

Original date of
delivery from Works .....

Foreword

IN COMPILING THIS BOOK some knowledge of the operation and care of a Motor Car has been pre-supposed, and the instructions contained herein, will, if followed with reasonable care, enable you to obtain the maximum enjoyment and satisfaction from your JENSEN Car.

Illustrations are provided to give useful information in the simplest form, and a lubrication chart will be found on page 11.

In the rare event of any unforeseen defect or unusual trouble developing, it is requested that the matter be at once brought to our notice.

The interest of Jensen Motors Ltd. in their productions does not end with the delivery of the Car; on the contrary, it is the Company's desire to keep in close touch with all Jensen owners, and to provide for their convenience, a Service after sales second to none.

JENSEN MOTORS LIMITED

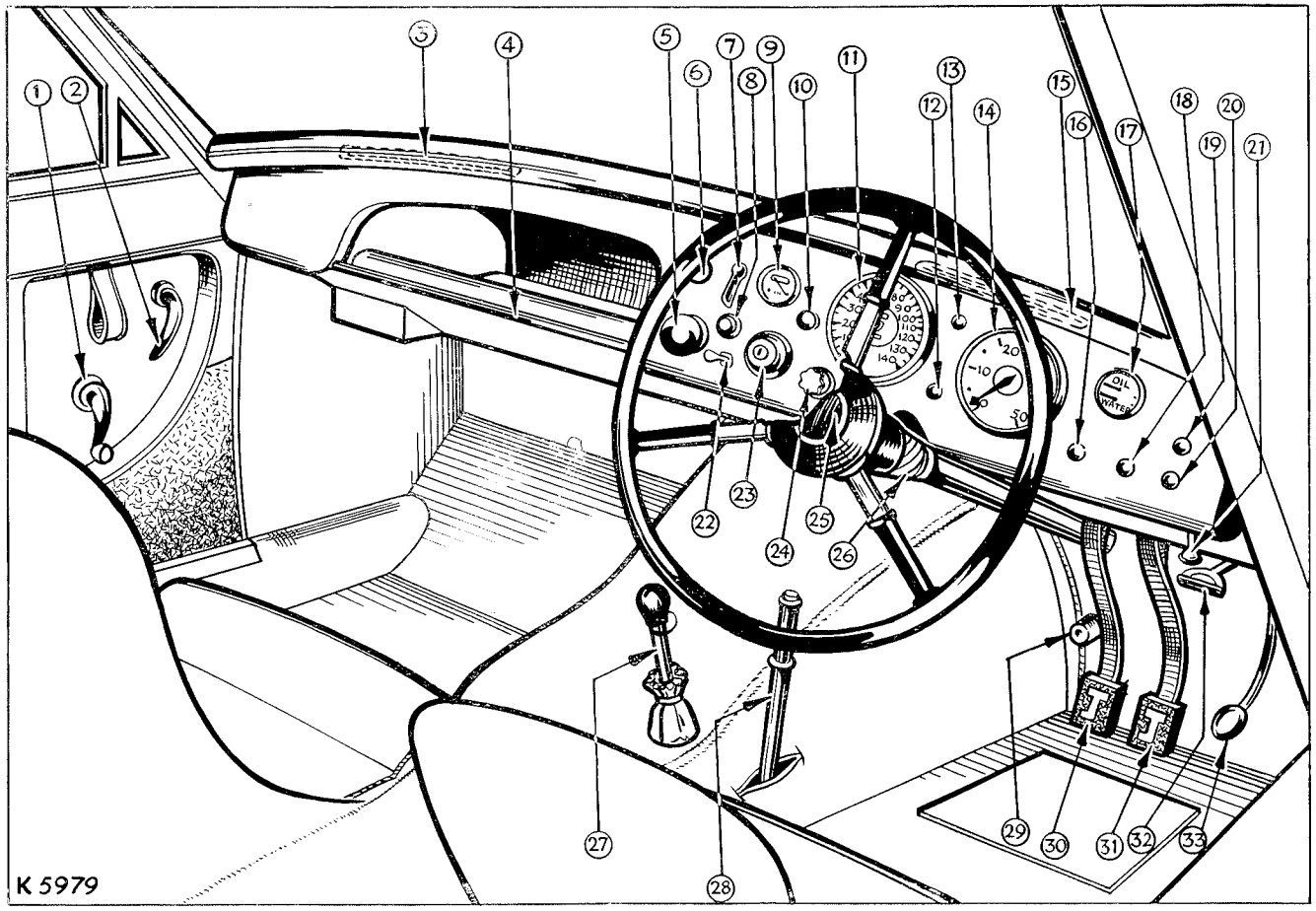

1. Window Winder.
2. Door Handle.
3. Demister Duct.
4. Grab Rail.
5. Ash Tube.
6. Overdrive Switch.
7. Trafficator Switch.
8. Starter Switch.
9. Fuel Gauge.
10. Choke.
11. Speedometer.
12. Ignition Warning Light.
13. Traffic Warning Light.
14. Rev. Counter.
15. Demister Duct.
16. Panel Switch.
17. Oil and Water Gauge.
18. Wiper Switch.
19. Reserve Warning light.
20. Reserve Petrol Switch.
21. Screenwasher.
22. Reverse Light Switch.
23. Ignition and Lamp Switch.
24. Heater Switch.
25. Horn Push.
26. Steering wheel Adjustment.
27. Gear Control Lever.
28. Handbrake Lever.
29. Dipswitch.
30. Clutch Pedal.
31. Brake Pedal.
32. Radiator Flap Shutter.

INSTRUMENTS AND CONTROLS Fig. 1

STARTING UP AND GENERAL RUNNING HINTS

Treat the new car with consideration. Although every JENSEN car is thoroughly tested on the road, the first few hundred miles should be done at a moderate speed. We do not tie JENSEN owners to the monotonous observance of an arbitrary maximum speed for a given distance, but we recommend that sustained high speeds in excess of say 60 miles per hour be avoided until the car has had reasonable time to settle down and all moving parts are freed from their initial stiffness. The observance of these precautions will be reflected later on in the prolonged life of the car. Under this heading, lubrication is by far the most important item. Many troubles are directly traceable to lack of proper lubrication and owners will be well repaid by giving careful attention to the lubrication diagram Page 11.

The engine attains maximum power at 3700 r.p.m. and 4000 r.p.m. should not be exceeded.

We strongly recommend owners who do not wish to carry out their own oiling and greasing to take advantage, where possible, of the facilities offered by service stations with modern lubrication equipment.

The illustration on page four shows the general arrangement of controls and the following points should be observed in starting the engine.

(a) Ensure that the gear control lever is in neutral.

(b) Switch on the ignition and if starting from cold, pull out switch on facia marked **C**. This operates a small electric starting carburetter which feeds a rich mixture to all the cylinders. Press starting switch firmly. The engine should then start immediately. **Never Race the Engine from a cold start—this is most injurious.**

The starting carburetter must be switched off when the engine has warmed up. As a general guide, this will take place after ½ to 1½ miles have been covered, depending on the ambient temperature.

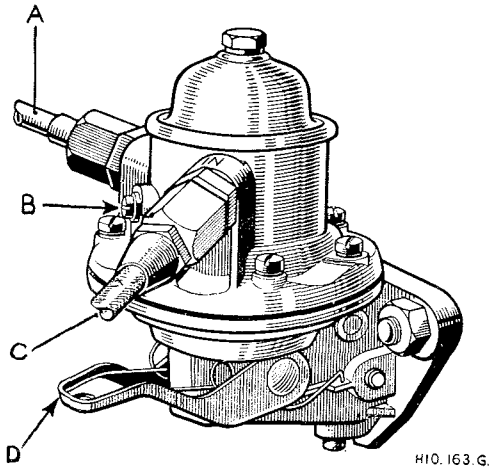

Fig. 2.

The fuel pump is mounted on the L.H. side of the engine crank case.

(a) Outlet pipe.

(b) Drain Plug.

(c) Fuel pump inlet pipe.

(d) Hand priming Lever.

(c) When the car has been parked for some time or if the carburetter float chambers have been dismantled for cleaning, fuel will have to be pumped to the carburetter before the engine can be started. In these circumstances operate the fuel pump hand priming lever. (*Fig.* 2).

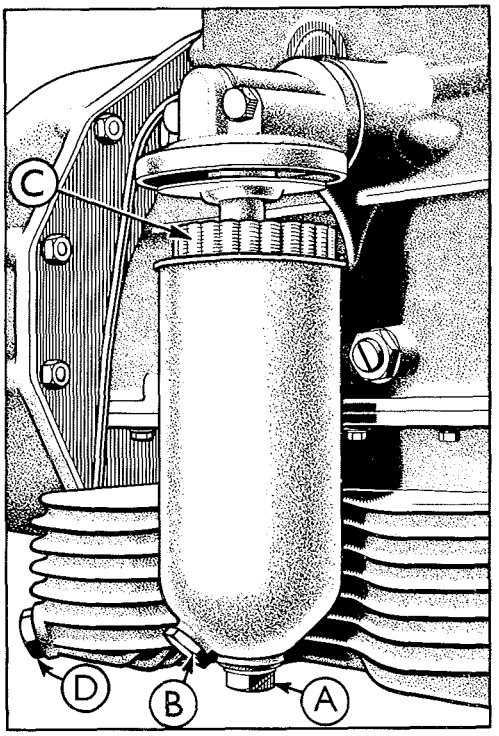

Fig. 3.

The full flow oil filter should only be dismantled when the filter element is to be renewed.

(a) Centre fixing bolt.

(b) Filter casing drain plug.

(c) Filter element.

(d) Oil sump Drain plug.

The change speed arrangement being conventional, we do not propose to describe the method of engaging and changing gear, but we give here a plan showing the gear lever positions. (*Fig.* 4.)

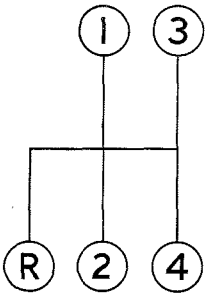

Fig. 4.

Overdrive.

The overdrive is an optional extra. To engage overdrive, which can only be operated from fourth speed position, all that is required is to pull switch on facia marked **overdrive.** No movement of the clutch or alteration of accelerator pedal is necessary. Reverse process to return to fourth speed position.

CARE AND MAINTENANCE.

For correct lubrication of all engine parts, it is only necessary to maintain the correct oil level in the sump. This is ascertained by a Dipstick located on the right hand side of the engine.

On all new or reconditioned engines, the sump and full flow oil filter should be drained and refilled with new oil after the first 500, 1,000 and 2,000 miles. After this the operation should be repeated every 2,000 miles to provide the best running conditions.

There is one drain plug in the sump and one near the bottom of the oil filter reservoir (See (b) Fig. 3). The capacity of the engine lubrication system is 15 pints (8.4 litres), plus 2 pints (1.13 litres) for full flow Tecalemit Filter.

Cylinder Head Nuts

After the first 500 and 2,000 miles of running, the cylinder head nuts should be tightened. Tighten each nut a little at a time, working from the centre outwards. This operation should be carried out when the engine is hot. Tappets must be checked after this operation and readjusted if necessary.

Oil Pressure.

The oil pressure gauge indicates whether the oiling system is working correctly and it should be looked at occasionally while the engine is running.

The normal working pressure is 55 p.s.i. and the idling pressure is 26 p.s.i. Should the normal oil pressure appear low, then it is possible that the full flow Tecalemit oil filter is choked and in need of renewal. Never run the engine if the oil gauge does not register pressure as serious damage may result.

Chassis Lubrication.

The various points of the chassis should receive periodical attention as indicated in the Lubrication Chart on Page 11. It is of **vital importance** that the rear hubs receive attention at the periods recommended, as the rear hub bearings are actually sealed from the oil circulating in the main casing.

Rear Axle Lubrication.

The standard rear axle for this model is a Hypoid Bevel type with a ratio of 2.93 : 1. After the first 2,000 miles, drain the rear axle and refill with a recommended type of new oil to the level of the combined oil filler and level plug. The oil level should be checked every further 2,000 miles and topped up when necessary.

It is extremely important that only approved Hypoid oils be used with this axle, without the use of additives of any kind.

Gearbox Lubrication.

Drain gearbox and refill with new oil to the top level on the dipstick after the first 2,000 miles. Access to the dipstick and oil filler plug is gained by lifting the rubber plug in Tunnel. The capacity of the gearbox is $6\frac{1}{2}$ pints and if Overdrive is fitted the combined capacity of Gearbox and Overdrive is 8 pints, the oil level on the gearbox dipstick remaining the same. The oil level should be checked every further 2,000 miles and topped up when necessary.

RECOMMENDED LUBRICANTS FOR JENSEN '541'

WAKEFIELD

Engine	**Summer**	Castrol XL.
	Winter	Castrolite.
Gearbox & Overdrive		Castrol XL.
Rear Axle (Hypoid) & Steering Box		Castrol Hypoy.
Chassis Lubrication & Wheel Hubs (Grease Gun.)		Castrolease Heavy.
Oil Can		Castrol XL.

VACUUM

Engine	**Summer**	Mobiloil "A".
	Winter	Mobiloil Arctic.
Gearbox & Overdrive		Mobiloil "A".
Rear Axle (Hypoid) & Steering Box		Mobilube GX90.
Chassis Lubrication & Wheel Hubs (Grease Gun.)		Mobilgrease No. 4.
Oil Can		Mobiloil "A".

B.P.

Engine	**Summer**	Energol SAE. 30.
	Winter	Energol SAE. 20.
Gearbox & Overdrive		Energol SAE. 30.
Rear Axle (Hypoid) & Steering Box		Energol EP SAE. 90.
Chassis Lubrication & Wheel Hubs (Grease Gun.)		Energrease C3.
Oil Can		Energol SAE. 30.

SHELL

Engine	**Summer**	X—100 30
	Winter	X—100 20/20W
Gearbox & Overdrive		X—100 30
Rear Axle (Hypoid) & Steering Box		Spirax 90 EP.
Chassis Lubrication & Wheel Hubs (Grease Gun.)		Retinax "A".
Oil Can		X—100 30.

ESSO

Engine	**Summer**	Essolube 30.
	Winter	Essolube 20.
Gearbox & Overdrive		Essolube 30.
Rear Axle (Hypoid) & Steering Box		Esso Expee Compound 90.
Chassis Lubrication & Wheel Hubs (Grease Gun.)		Esso pressure Gun grease.
Oil Can		Essolube 30.

ADJUSTMENTS.

The engine should not require any major adjustments for at least 20,000 miles.

After this distance, should there be any falling off in efficiency, it may be advisable to have the cylinder head removed for decarbonising, valve grinding and tappet adjustment. The correct tappet clearance is .012″ when the valve is closed. (Hot or cold).

Sparking Plugs.

Sparking plugs should be removed and cleaned in a special plug cleaning machine. After cleaning, the points should be checked and reset if necessary to the correct gap of .035″. The carburetters should be checked and cleaned. (See carburetter section Page 19).

GENERAL DIMENSIONS AND DATA FOR QUICK REFERENCE.

The car number will be found stamped on a plate secured to the bulkhead. This number is also stamped on the top of the L.H. chassis frame side member immediately aft of the front suspension. The engine number is stamped on the R.H. side of the Cylinder Block immediately below number 2 Spark Plug.

Bore	87 m.m. (3.4 ins.).
Stroke	111 m.m. (4.37 ins.).
Cubic Capacity	3,993 c.c. (243 cub. ins.).
R.A.C. Rating	28.2 H.P.
Compression Ratio	6.8 : 1 (Special Head 7.4 : 1).
Firing Order	1, 5, 3, 6, 2, 4.
Coolant Capacity	31 Pints.
Oil Sump Capacity	15 Pints plus 2 Pints for full flow filter.
Gearbox Capacity	$6\frac{1}{2}$ Pints (8 Pints with Overdrive).
Rear axle capacity	3 Pints.
Fuel Tank Capacity	15 Gallons (12 Main + 3 Reserve).

Overall Gear Ratios.		**With Overdrive.**	
1st	9.9 : 1		11.98 : 1
2nd	6.76 : 1		8.14 : 1
3rd	4.18 : 1		5.06 : 1
4th	2.93 : 1		3.54 : 1
Reverse	12.0 : 1	Overdrive	2.75 : 1
		Reverse	14.5 : 1

Tyres	Dunlop 5.50-16 (6.40×15 with wire wheels).
Tyre pressure	28 p.s.i. all round. (6.40×15—24. p.s.i.).
Wheelbase	8 ft. 9 ins.
Track	Front — 4 ft. $3\frac{7}{8}$ ins.
,,	Rear — 4 ft. $3\frac{3}{8}$ ins.
Toe-in	0 ins. to $\frac{1}{16}$ ins.
Camber	$\frac{1}{2}°$
Caster Angle	2°
King Pin Inclination	$6\frac{3}{4}°$
Overall Width	5 ft. 3 ins.
Overall Height	4 ft. 5 ins.
Overall Length	14 ft. 10 ins.
Ground Clearance	7 ins.
Turning Circle	34 ft.
Clutch Pedal	$\frac{1}{2}$ ins. free movement.
Weight (Dry)	26 Cwts.
Centre of Gravity	49 ins. aft of Front axle.
Steering ratio	16 : 1. $2\frac{2}{3}$ turns lock to lock.

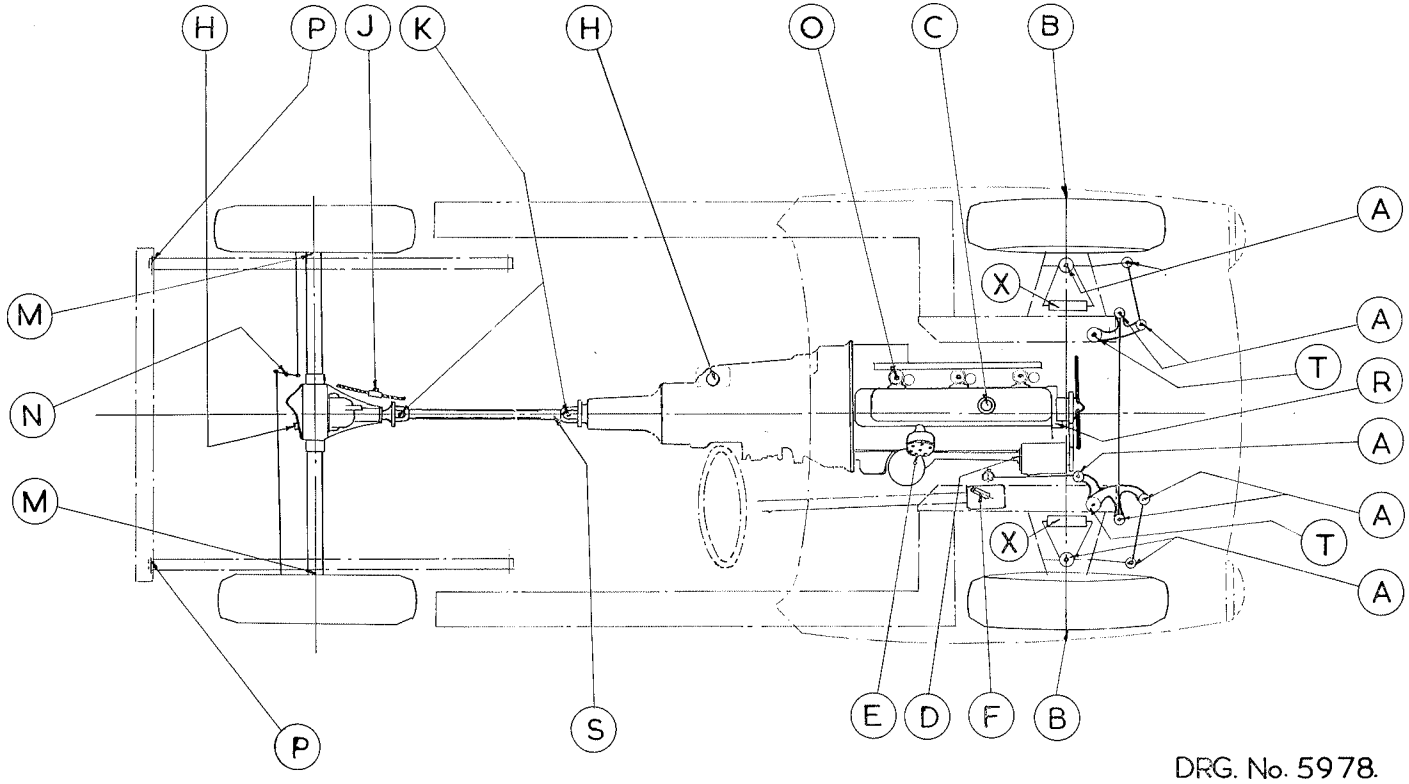

LUBRICATION CHART Fig. 5

WEEKLY OR 500 MILES.			
OIL GUN	A	Steering Connections	8
		Swivel Axles	4
		Front Suspension Lower Joint	2
OIL	C	Top up Engine Crankcase	–
OIL GUN	P	Rear Spring Shackles	2
	O	Carb. Piston Chambers	3

MONTHLY OR 2,000 MILES.			
OIL	C	Drain and Refill Engine Crankcase	–
	H	Top up Gearbox and Rear Axle	–
OIL GUN	N	Brake Balance Lever	1
	R	Water Pump Bearing	1
	M	Rear Hubs (1,000 Miles)	2
OIL GUN	S	Sliding Spline	–
	J	Brake Cable	1

OCCASIONALLY OR 5,000 MILES.			
OIL	F	Top up Steering Box	–
OIL GUN	K	Universal Joints (10,000 Miles)	2
GREASE	B	Front Hubs 2.	2
OIL CAN	E	Distributor Drive Shaft (3,000 Miles)	
	D	Dynamo Lubricator (10,000 Miles)	
	T	Steering Lever Bearings (10,000 Miles)	2
	X	Only Requires Checking During Suspension Overhaul	

Ignition. Lucas Coil and Distributor. Automatic advance and retard. Direction of rotation — anti-clockwise. Contact Breaker Gap .012 ins.

Spark Plugs. Champion N.8.B. Gap .035 ins.

Valve Clearances. .012 ins. hot or cold.

ELECTRICAL EQUIPMENT.

Lamp Bulbs.

Headlamps	12v.	60/36	Lucas No.	404.
Side Lamps	12v.	6w.	,, ,,	989.
Number Plate	12v.	6w.	,, ,,	989.
Reverse Lamp	12v.	24w.	,, ,,	199.
Instrument	12v.	18 amps.	,, ,,	987.
Warning Lamps	12v.	18 amps.	,, ,,	987.
Stop & Tail	12v.	18/6w.	,, ,,	361.
Flashers	12v.	24w.	,, ,,	199.
Boot & Bonnet Light	12v.	6w.	,, ,,	989.

Battery.

The Lucas 12 volt Battery Type GTW11A 64 amp. hrs. is situated below R.H. rear seat. This location is preferable to under Bonnet fixing as fluid evaporation is far less rapid and consequently the "topping up" operation is less frequently required. When the acid level falls below the top of the plates, distilled water should be added until the plates are again covered. Keep the battery terminals clean and tight and well smeared with petroleum jelly. This will protect the terminals from corrosion, which if allowed to continue unchecked, will result in a break in the battery circuit.

It is important that the battery be firmly secured in its supporting brackets at all times. When removing or replacing battery, remove clamp bar and bolts away from well, otherwise bolts may be bent by the weight of the battery.

Headlamps.

Each headlamp incorporates a Lucas light unit which consists essentially of a combined reflector and front glass assembly provided with a mounting flange by means of which it is secured to the body housing. The bulb which is a Lucas Prefocus type is located accurately in the reflector and is secured by a bayonet fixed backshell, which also provides the contact to the bulb. The design of the bulb is such that it is correctly positioned in relation to the reflector and no focusing is required when a replacement bulb is fitted.

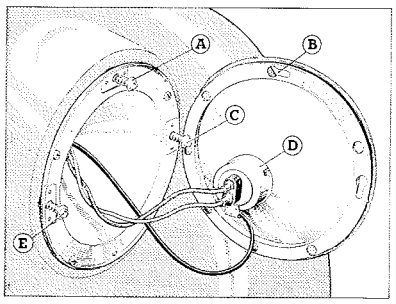

Fig. 6.
Headlight Adjusting.

A. C and E are Reflector adjusting screws, B is a slotted way, and D the Bayonet catched backshell.

Headlamp Alignment.

Double dipping headlamps are used on this model and these must be set correctly in relation to the road and each other. If adjustment is necessary proceed as follows :-

Remove the front rim by slackening the securing screw. If vertical adjustment is required, set the light unit to the required position by means of the vertical adjustment screw, turn this in a clockwise direction to raise the beam and in an anti-clockwise direction to lower it. If horizontal adjustment is required, set by means of the two adjusting screws (one on each side of the light unit).

Screenwiper.

The screenwiper is of the heavy duty type and the motor is housed in the scuttle above and aft of the heater unit. To remove the motor it will be necessary to remove casing above and aft of the heater which will expose a detachable plate upon which the motor is mounted. When this panel has been removed and the rack and wiring cables disconnected, the motor may be withdrawn.

BRAKES.

A Girling Hydraulic Braking system is used on this model and employs two trailing shoe brakes at the front and single leading shoe brakes at the rear, all being operated by the foot pedal in conjunction with Vacuum Servo Motor. A handbrake operates the mechanical linkage to the rear brakes. The supply tanks for the brake and clutch master cylinders are integral with the cylinders and the fluid level should be checked approximately every 2,000 miles and topped up if necessary, with Girling Brake fluid, to within half an inch of the top of the tanks. This clearance is necessary to allow for the expansion of the brake fluid.

Adjustment (Rear Brakes).

No attempt should be made to adjust the brakes with the hand brake on. Means for adjustment are available at each rear brake backing plate, whereby each shoe can be moved to the closest proximity of the drum without actual contact. On the rear brakes there is one adjuster between each pair of shoes. This square ended adjuster can be turned, a notch at a time, and the engagement, which can be heard and felt, is caused by the flat sides of the adjuster engaging with the plungers supporting the ends of the shoes. Turn the adjuster in clockwise direction as far as it will go. The brake shoes are then hard on and the adjuster should be turned back one full notch to give the shoes the correct clearance from the drum. Press the brake pedal hard once or twice to centralise the shoes in the drum.

Adjustment (Front Brakes).

The front brakes do not require adjustment as these are of the Hydrostatic self adjusting type.

Bleeding the Brakes.

If any of the hydraulic brake system has been disconnected, it will be necessary to bleed the system, when the connections have been reassembled, to ensure that the hydraulic fluid is free from air bubbles. There is a bleed nipple fitted on the back of the brake backplate assembly for each expander. Connect the rubber drain tube to one of the brake bleed nipples and immerse the open end of the tube into a jar, partly filled with brake fluid. Then fit a spanner on the Hexagon sides of the bleed nipple and unscrew the nipple one full turn. The brake pedal should now be applied repeatedly with slow full strokes until the fluid entering the jar from the drain tube is completely free from air bubbles. The bleed nipple should now be tightened with the spanner during a down stroke of the brake pedal. Repeat for the other nipples.

It is important when bleeding the brakes to check the fluid level in the supply tank at frequent intervals and to top up as necessary to ensure that the master cylinders are never starved of fluid. Should air reach the master cylinders it will be necessary to bleed the whole system again.

Fluid which has just been bled from the system should never be used for topping up the supply tank immediately, since it will be, to some extent, aerated. It must, therefore, be allowed to stand for an hour or two before it can be safely used again. Dirty fluid must be discarded since grit or other foreign matter in the system will seriously effect braking efficiency and cause unnecessary wear.

Servo.

Under normal conditions the Servo motor should not require attention over long periods. However, should any trouble be experienced with the Servo, it is recommended that the unit be returned to the manufacturer for servicing. (See page 28).

Care should be taken to see that the breather pipe on the Servo unit is never left disconnected from the breather valve situated on the front of the bulkhead in the centre of the R.H. side, below the Servo.

FRONT SUSPENSION.

The independent front suspension is of the 'Wishbone' type, the coil springs being held in compression between the chassis frame and the lower Wishbone. Damping is effected by telescopic hydraulic dampers (Girling DAS6). The dampers are of the sealed type and no attention to them should be necessary. Suspension lubrication points are shown in the lubrication chart (See Page 11).

Alignment of Front Wheels.

Alignment of the front wheels is an important factor in tyre economy and ease of steering. The front wheels should have a toe-in of between 0 ins. and $\frac{1}{16}$ins. This measurement is taken between the wheel rims at the front and rear of the wheels at a height equal to the centre of the wheel to the ground. The rear measurement should be between 0 ins. and $\frac{1}{16}$ ins. greater than the front measurement. If the difference between the two measurements is other than this, the wheels are out of alignment and adjustment should be made immediately.

To carry out this adjustment, loosen the lock nuts on the ends of the front cross-tube and rotate the tube in the appropriate direction to give the correct toe-in. To permit this adjustment the cross tube carries a right-hand thread at one end and a left-hand thread at the other end. When the correct measurement has been obtained, retighten the two lock nuts. Do not alter setting of side tubes.

Adjusting Front Wheel Bearings.

If there is excessive play in the bearings, they can be adjusted as follows :—

Jack up the front of the car and remove the nave plates and hub caps. Remove cotter pins from bearing nuts and tighten bearing nuts with a suitable wrench. The bearing spacer is of the non-collapsible type and provided the bearing nut is pulled up tight, the correct bearing clearance will be obtained. Replace cotter pins. If play still exists after tightening up the hub nuts, it is probable that the bearings will need replacement.

Lubrication of Front Wheels.

Wheel bearings should be cleaned and repacked with grease every 5,000 miles under normal conditions.

Centre Lock Wire Wheels.

Where centre lock wire wheels are fitted it is essential that the hubs, hub nuts and inner portion of the wheel shell are kept clean and well lubricated.

Engine oil should be used for the latter purpose and not grease, particular attention being paid to the conical surfaces.

CARE OF TYRES.

Tyre Pressures.

The correct pressures are as follows :— 5.50 × 16 :—28 p.s.i. all round.
6.40 × 15 :—24 p.s.i. all round.

For sustained high speed in excess of 90 miles per hour, the tyre pressures should be increased to 34 p.s.i. all round for 5.50×16, and 30 p.s.i. for 6.40×15 tyres.

Pressures (including spare) should be checked and adjusted at least weekly. This should be done when the tyres are cold and not when they have attained normal running temperatures. Any unusual pressure loss should be investigated and corrected.

Under-inflation has an adverse effect on the car and causes rapid and sometimes irregular wear. Also the casing may be damaged by excessive bending.

Changing Position of Tyres.

To obtain the best tyre mileage, equal wear, and to suppress the development of irregular wear on front tyres, interchange front tyres with rear tyres at least every 2,000 miles.

Tyre and Wheel Balance.

To provide smooth riding, precise steering and to avoid high speed steering reaction, the tyres are balanced to predetermined limits. By fitting the tyre so that the white spots near the cover bead coincide with the black spots on the tube, a high degree of balance is achieved.

If a higher degree of balance is required, the complete tyre and wheel assembly should be balanced.

All wheel assemblies on JENSEN cars are balanced before leaving the factory.

The original balance may be disturbed after a period of running. It can be checked, and, if necessary, corrected by any Service Station with tyre balance equipment.

Factors Affecting Tyre Life.

The most important factors which have an adverse affect on tyre life are :—

(1) Incorrect tyre pressures.
(2) Misalignment of wheels (See alignment of front wheels, Page 14).
(3) High average speeds. The rate of tread wear at 50 m.p.h. is nearly twice as fast as at 30 m.p.h.
(4) Harsh acceleration.
(5) Frequent fierce braking.
(6) Warm dry weather. The rate of tread wear in summer may be twice as fast as during a cold and wet winter.
(7) Bad road surfaces.
(8) Winding, cambered and abrasive roads. Quite moderate speeds on such roads will produce faster tread wear than much higher speeds on straight flat roads.

TRANSMISSION.

Clutch.

The Borg and Beck 10in. diameter dry, single plate clutch has a spring cushion drive and a total frictional area of 88 sq. ins. The clutch pedal is isolated from the clutch housing by means of a flexible hydraulic control. A clearance of $\frac{1}{16}$ in. should be maintained between the carbon release bearing and the pressure pad. This may be checked by removing the clevis pin connecting the clutch release arm and the slave cylinder connecting arm and measuring the amount of free movement at this connecting point.

This should be $\frac{1}{8}$ in. If it is other than this, adjustment may be effected by slackening off clevis locknut and rotating clevis in the appropriate direction to obtain the requisite free movement. When this has been obtained the pin should be replaced, split pinned and clevis locknut fully tightened.

The method of bleeding is the same as that described for the brakes on Page 13.

The clutch release bearing requires no lubrication.

Gearbox.

The gearbox provides 4 speeds forward and reverse, with synchromesh 2nd, 3rd and top gears. Ratios are as follows :—

1st Gear	3.07:1	2nd Gear	1.88:1
3rd Gear	1.27:1	4th Gear	1.00:1
Reverse	3.07:1		

Instructions for lubrication are given on Page 7.

The gearbox mainshaft is extended in a housing which allows the use of a short propeller shaft and provides additional mainshaft bearings to give firmer positioning for the gears.

Oil capacity $6\frac{1}{2}$ pints. When Overdrive is fitted (optional extra) the combined capacity of the gearbox and overdrive is eight pints.

Propeller Shaft.

The open propeller shaft has Hardy Spicer needle roller bearing universal joints.

Lubrication particulars for this will be found on the lubrication chart on Page 11.

Rear Axle.

The rear axle is of the semi-floating type with shim adjustment for all the bearings and meshing of the Hypoid drive gear and pinion matched assembly. The axle shafts are splined at the inner ends, which engage splines in the differential side gears, while the outer ends have tapers and keys to fit the rear wheel hubs.

The hubs are supported by taper roller bearings pressed on to the axle shafts and located in the ends of the axle tubes. Outward thrust on either wheel is taken by the adjacent hub bearing, whilst inward thrust is transmitted through the axle shafts and slotted axle shaft spacer to the opposite bearing. Thus, each hub bearing takes thrust in one direction only.

A cover on the rear of the gear carrier housing permits the inspection and flushing of the differential assembly without dismantling the axle.

The axle gear ratio is stamped on a tag attached to the assembly by one of the rear cover screws. The axle serial number is stamped on the gear carrier housing and should always be referred to when corresponding with reference to any particular unit.

In the event of trouble through any cause, wherever possible it is strongly recommended that use should be made of the factory reconditioning service.

It should be clearly understood that the adjustment of the Hypoid Bevel axle is more complex than that necessary for the satisfactory performance of the spiral bevel.

For rear axle lubrication, see instructions on Page 7.

FUEL SYSTEM.

Fuel Pump.

The fuel tank is mounted aft of the rear axle and is of 15 gallons capacity—12 gallons main, 3 gallons reserve. The 3 gallons reserve are not metered on the gauge. From this tank fuel is fed to the carburetter by an A.C. mechanical pump mounted on the L.H. side of the engine crank case. A priming lever is fitted to enable the carburetter to be primed by hand (See Fig. 2, Page 5). This should be used if the carburetter float chamber has just been replaced after cleaning, to save an excess of strain on the battery through using the starter to pump fuel through the system. Approximately every 5,000 miles the strainer gauze in the fuel pump should be removed and cleaned.

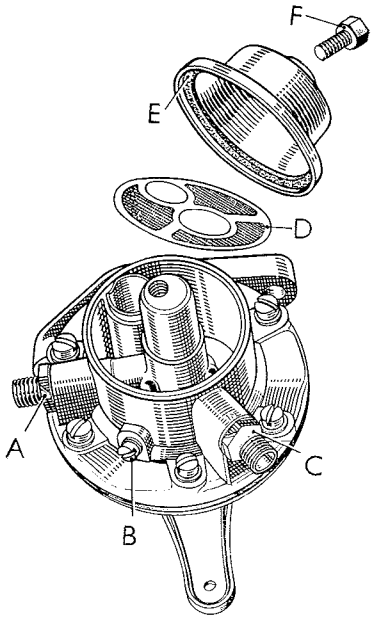

Fig. 7.

This exploded view of the fuel pump, shows the location of the strainer gauze.

A. Outlet pipe union.

B. Drain Plug.

C. Inlet pipe union.

D. Strainer gauze.

E. Cork washer.

F. Cover securing screw.

Access to the strainer is gained by removing the pump top cover and at the same time that the strainer gauze is removed, the pump drain plug should be unscrewed and all sediment removed from the body of the pump chamber. Use fuel and a non-fluffy rag for cleaning the chamber and for the strainer gauze use fuel only. (See Fig. 7, Page 17).

Fig. 8.

(1) Filter.
(2) Float.
(3) Float chamber securing. nut.
(4) Float needle.
(5) Air bleed.
(6) Bridge plate screw.
(7) Fast idling screw.
(8) Stop collar.
(9) Terminal knob.
(10) Solenoid Case.
(11) Solenoid.
(12) Plunger.
(13) Control spring.
(14) Plunger return spring.
(15) Valve flat.
(16) Valve seat insert.
(17) Olive union nut.
(18) Taper needle.
(19) Thermo jet.
(20) Fuel passage.
(21) Holding up bolt.
(22) Banjo union bolt.
(23) Float tickler pin.

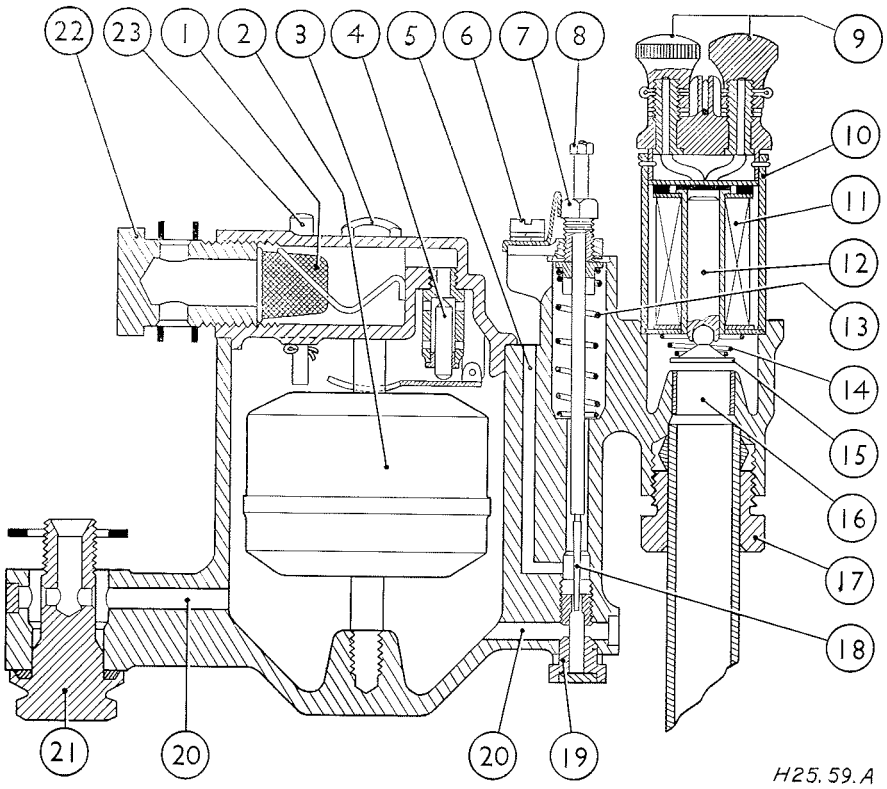

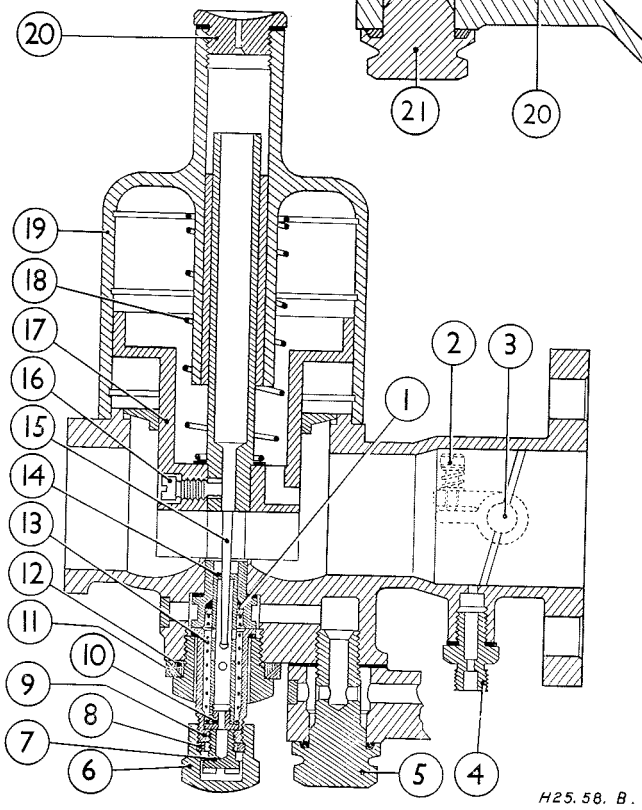

Fig. 9.

(1) Cork Gland Washer.
(2) Slow running adjustment screw.
(3) Throttle spindle.
(4) Vacuum Ignition Union.
(5) Holding up bolt.
(6) Nut cap.
(7) Jet adjusting screw.
(8) Fibre washer.
(9) Jet lower bearing.
(10) Jet head.
(11) Brass sealing ring.
(12) Cork sealing ring.
(13) Gland spring.
(14) Main jet.
(15) Needle.
(16) Needle locking screw.
(17) Piston.
(18) Piston spring.
(19) Suction chamber.
(20) Oil Cap.

Fig. 10.

(1) Upper jet bearing.
(2) Main jet.
(3) Cork gland washer.
(4) Fuel Passage.
(5) Gland washer.
(6) Brass sealing ring.
(7) Jet head.
(8) Nut cap.
(9) Jet adjusting screw.
(10) Fibre washer.
(11) Jet lower bearing.
(12) Set screw.
(13) Cork sealing ring.
(14) Gland spring.
(15) Copper plug.
(16) Float chamber body.
(17) Copper washer.

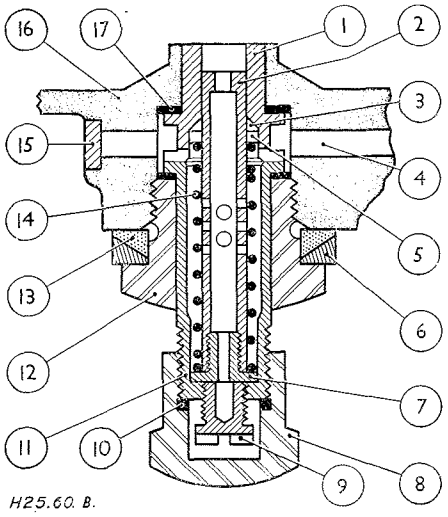

The model '541' has three S.U. carburetters, with a small electrically operated carburetter for starting. This starting carburetter which is operated by a switch on the facia panel marked '**C**,' supplies a rich mixture to the cylinders for easy starting. This starting carburetter must be switched off as soon as possible after the motor has warmed up.

The carburetters are carefully synchronised to ensure perfect running for the engine and it is, therefore, very important that the throttle linkage between the carburetters is not interfered with in any way. The carburetters will also give the best results if adjustments are only made when absolutely necessary.

Maintenance.

The only attention normally required is the monthly application of a few spots of thin machine oil to each carburetter suction chamber oil cap. This will ensure that the taper needle and piston assembly are free to respond readily to changes in engine speed.

The filter in the inlet unions to each carburetter should be cleaned occasionally. Unscrew the unions, lift off the filter, rinse in clean fuel and replace. Ensure that the two fibre washers are in position on each side of the union.

If the running of the engine is poor, always make sure that the trouble does not lie elsewhere than the carburetters. Check the spark plugs and distributor contact breaker points and see that the tappets are correctly set.

Carburetter Pistons.

Sluggish and uneven running may be caused by sticking carburetter pistons. When the engine is thoroughly warm, remove the air cleaner and connections, switch off the engine and then check that the carburetter pistons fall freely when lifted and released. If any of the pistons stick, the cause may be dirt in the suction chamber or an incorrectly centred jet. To examine a suction chamber, remove its three securing screws and lift off the cover, when the chamber and piston can be cleaned with a non-fluffy rag. Do not use metal polish or emery cloth. If when the piston is replaced it does not fall freely, it is probable that the jet is not correctly centred or the jet needle is bent. In the latter case needle should be replaced.

To centre the jet, remove the nut cap, release the large hexagon screw half a turn or so and then screw up the jet as far as it will go, noting the number of turns. This procedure will centre the jet on the needle and the large hexagon screw can now be tightened. Finally, release the jet the same number of turns as were needed to screw it up fully.

Slow Running.

When the idling setting is correct, the carburetters will operate properly at all speeds. The two adjustments on each carburetter effecting slow running are the throttle stop screw and the jet adjustment screw. The jet adjustment screws weaken the mixture when screwed up and enrich it when screwed down. When these screws are correctly adjusted, lifting any of the pistons with a thin blade will slow the engine down. If the lifting of the piston makes the engine go faster, it indicates that the carburetter setting is too rich and must therefore be weakened. At the same time it may be necessary to enrich the other two carburetters until a good balance is obtained.

Starter Carburetter.

The only adjuster is the idling hexagon screw through which the needle passes. When the engine is hot and the starter carburetter is switched on, the screw should be adjusted upwards as far as possible without uneven running of the engine. If next time a cold start is attempted, the engine starts and then stops, the adjusting screw should be released another third of a turn.

Air Cleaner.

The three cleaner elements should be removed and cleaned every 5,000 miles. To do this remove the air cleaner by unscrewing the three bolts which secure the cover plate and the three elements to the back plate. Immerse the elements in petrol and wash thoroughly. Allow to dry and then dip in clean engine oil. Shake out any surplus oil and reassemble.

When carrying out the above operation it is necessary to disconnect the rubber Servo connection. Care must be taken to prevent dirt from entering the system whilst the pipe is disconnected.

ENGINE.

Dimensions.

Bore 87 m.m. (3.43 ins.).
Stroke 111 m.m. (4.375 ins.).
Capacity 3993 c.c. (243 cub ins.).
R.A.C. rating 28.2 h.p.
Compression ratio 6.8 : 1 (Standard) 7.4 : 1 (Special Head).

Cylinders.

Six cylinders, integral with crankcase. Special cast iron is used and there are full length water jackets. The detachable cast iron cylinder head carries the valve gear.

Maximum Rebore.

The maximum permissible rebore is bore diameter plus .040 ins.

Crankshaft.

The forged steel counterbalanced crankshaft has a torsional vibration damper and is supported by four detachable "Thinwall" bearings.

Crankshaft Regrinding Sizes.

Undersize Bearing	CRANKPINS		JOURNALS	
	Minimum	Maximum	Minimum	Maximum
.020 in.	2.1048 in.	2.1053 in.	2.4590 in.	2.459½ in.
.040 in.	2.0848 in.	2.0853 in.	2.4390 in.	2.439½ in.

Connecting Rods.

The connecting rods are of forged steel with detachable "Thinwall" bearings.

Pistons.

Aluminium alloy with Anodised surface. Split skirt type with three compression rings and one scraper.

Piston Fitting.

.0012 ins. at top to .0018 at skirt.

Piston Rings.

Gap — .011 ins. to .015 ins.
Groove width. Compression .0957 ins. to .0967 ins.
Oil Control .158 to .159 ins.
Groove clearances — Compression .0017 to .0037.

Camshaft.

The forged steel camshaft is supported by four "Thinwall" bearings and driven by a duplex roller chain. A synthetic rubber tensioner ring for the timing chain, and a sound insulated timing gear cover combine to ensure quiet operation.

Valves.

Heat and corrosion resisting steel is used for the exhaust valves and silicon chrome steel for the inlet valves, while twin exhaust down-pipes permit the unrestricted escape of the exhaust gases from the cylinders.

Valve Timing.

Both the camshaft gear and the crankshaft gear are spot marked for valve setting; the inlet valve opens at 5° B.T.D.C.

Ignition.

Ignition coil with automatic advance and retard assisted by vacuum control.

Ignition Timing.

In order to reset the ignition timing, remove all spark plugs except that from No. 1 cylinder and using the starting handle rotate the engine until No. 1 piston is at T.D.C. before firing stroke. The compression felt at the handle will denote the correct stroke. T.D.C. of No. 1 piston is marked on the flywheel (1/6).

Set Micrometer adjustment to zero.

Remove the distributor cap and slacken pinch bolt of the distributor clamp.

Turn distributor casing until the contact breaker points just begin to open, with the rotor arm pointing to the relative position of No. 1 cylinder electrode in the distributor cap. The spark is then correctly timed.

Finally, retighten the pinch bolt in the clamping plate and refit the distributor cap.

Finer adjustment can be obtained under road conditions by means of the micrometer adjustment.

Lubrication.

A pressure gear pump forces oil from a fin cooled cast aluminium sump to all main, big end and camshaft bearings. Each main bearing oil feed is supplied from a circular channel cut in the bearing housing which provides a uniform feed of oil between the bearing surfaces.

Big end bearing lubrication, controlled by a special oil feed in the crankshaft also provides for jet lubrication of the cylinder walls, while oil from the camshaft front bearing is guided by deflectors fitted to the camshaft gear on the timing chain.

The valve rocker shaft is fed by oil on the camshaft rear centre bearing. Oil capacity 15 pints plus 2 pints for full flow Tecalemit filter.

COOLING SYSTEM.

Cooling.

Circulation of the coolant is by a large outlet centrifugal pump with a thermostat to assist rapid warming from cold.

The system is pressurised and a spring loaded flap is provided to give further control, should this be necessary. The flap control is situated above the brake pedal and should be used in conjunction with the coolant thermometer. To close the flap, it is necessary to pull the control handle and vice versa. Capacity of the cooling system is 31 pints.

Topping Up.

Coolant level should be checked weekly. Top up when necessary to replace coolant lost through evaporation. Use only rainwater, if available, and fill to approximately ½ in. below the top of the header tank when engine is cold.

Winter Precautions.

In winter, an anti-freezing mixture should be added to the cooling water as a safeguard against freezing and damage to the cylinder block or the radiator. Carefully follow the maker's instructions when preparing the mixture, and when topping up it will be necessary to maintain this mixture.

A satisfactory anti-freezing mixture is Smiths "Bluecol", and in this case the correct mixture for the coolant is 20% Bluecol and 80% water.

Bluecol does not evaporate and provided there are no leaks in the cooling system it is only necessary to top up with water. The boiling point of this solution is 103° centigrade.

Before adding the anti-freeze mixture it is always advisable to check the security of the hose connection between the engine and the radiator and other water joints.

Anti-freeze has a very searching action and soon reveals any joint weaknesses which unless remedied will give rise to a serious loss of coolant.

When anti-freeze has been added it is a good plan to tie an anti-freeze label to the radiator drain tap to prevent a garage employee from inadvertently draining the solution.

If anti-freeze is not used and no other precaution is taken, the water should be drained off completely when garaging the car at night during frosty weather.

There are two drain taps ; one is at the bottom of the radiator and one on the engine crankcase forward of the distributor.

When all the water has been drained the engine should be run for not more than one minute at tick-over speed to ensure complete elimination of water from the cylinder block.

It is advisable occasionally to clean out the tap apertures with a strong piece of wire since the drain taps may become choked with sediment which will prevent effective draining.

When the system has been drained it is a good plan to leave the radiator filler cap on the driving seat as a reminder to refill the cooling system before using the car again.

Flushing.

To ensure efficient circulation of the coolant and to reduce formation of chemical deposits within the cooling passages, the system should be thoroughly flushed with clean running water every 5,000 miles.

Cabin Cooling.

Sliding doors are provided on each side of the scuttle to permit cool air to be admitted to the car interior. Where temperature control unit (optional extra) is fitted, please refer to Page 29 for instructions.

ENGINE FAULT FINDING CHART.

ENGINE WILL NOT START.

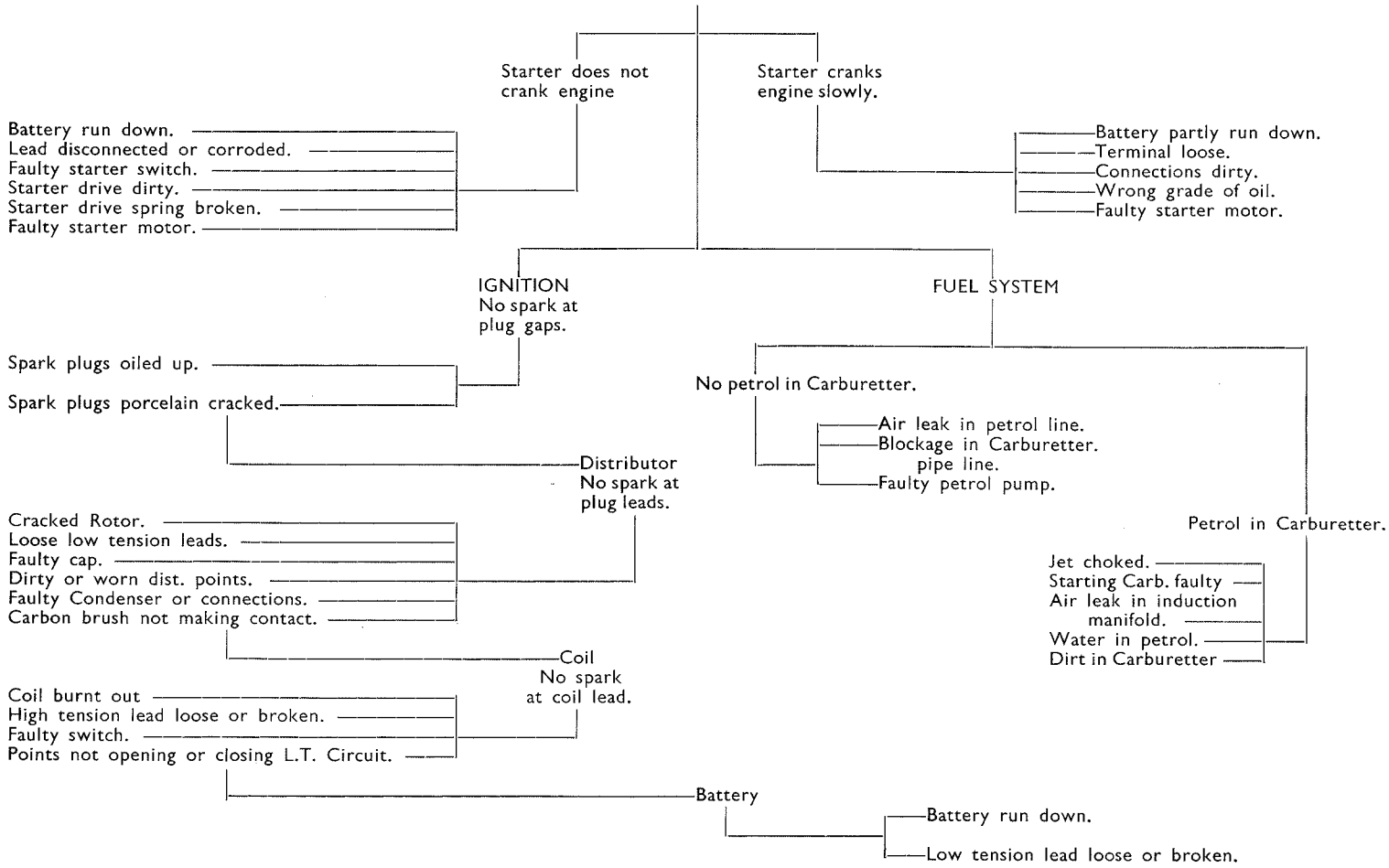

ENGINE MISFIRES.

IGNITION

- High tension leads to spark plugs shorting.
- Incorrect spacing of spark plug points.
- Cracked spark plug porcelain.
- Battery Connection loose.
- Faulty or damp cap.

CARBURETTER

- Water in Carburetter.
- Petrol line partly choked.
- Fuel pump pressure low.
- Fuel pump filter choked.
- Needle valve faulty or dirty.

MECHANICAL

- Valves sticking.
- Valves burnt or broken.
- Valve spring broken.
- Incorrect valve clearance.

ENGINE STARTS AND STOPS.

IGNITION

- Low tension connection loose.
- Faulty switch contact.
- Dirty contact points.

CARBURETTOR.

- Petrol line blocked.
- Water in petrol.
- Needle valve sticking.
- Fuel pump faulty.
- Petrol exhausted.
- Air leaks.

ENGINE RUNS ON WIDE THROTTLE ONLY.

CARBURETTER

- Slow running adjusting screw incorrectly adjusted.

MECHANICAL.

- Valve sticking.
- Valve burnt or broken.
- Valve spring broken.

ENGINE DOES NOT GIVE FULL POWER.

CARBURETTER

- Petrol supply faulty.
- Air leaks in induction pipe.
- Jet partly choked.

MECHANICAL and IGNITION

- Ignition retarded.
- High tension lead shorting.
- Valve burnt or bad seating.
- Incorrect valve clearance.
- Plug leads crossed.
- Faulty cap.

ENGINE RUNS IMPERFECTLY.

- Weak mixture.
- Petrol feed faulty.
- Inlet valve not closing.
- Ignition timing incorrect.
- Carburetter flooding.

ENGINE KNOCKS.

- Timing too far advanced.
- Excessive carbon deposit.
- Loose bearing or pistons.

STEERING.

The cam gear steering box has a ratio of 16:1 and has provision for taking up wear.

The height of the wheel is adjustable so that the driver may obtain the most comfortable position. Immediately below the wheel boss there is a knurled nut. To raise or lower the steering wheel it is necessary to release this nut — slide the wheel into the required position and lock knurled nut.

The oil filler cap should occasionally be removed and the oil level inspected. It is important that the oil level should be maintained at approximately ½in. from the top of the filler tube.

Fan Belt Adjustment.

The fan belt must be sufficiently tight to prevent slip at the Dynamo and Water Pump, yet there should be sufficient slack to move the centre of the belt sideways about 1in.

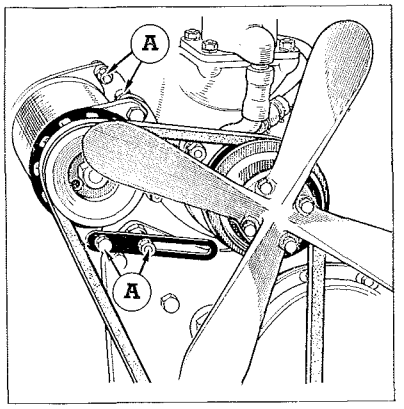

Fig. 11.

Dynamo adjustment.

Slacken at 'A' and swing up Dynamo to tighten the fan belt.
H.25. 162.A.

To make any necessary adjustments, slacken the bolts and raise or lower the Dynamo until the desired tension of the belt is obtained, then securely lock the Dynamo in position again.

BODYWORK.

Dust on the car may be lightly flicked off with a duster, but on all other occasions the car must thoroughly washed and dried before a cellulose polish is used. Any attempt to rub dirt off the car will result in a severe scratching of the smooth surface of the cellulose.

Grease and tar splashes must be very carefully removed with a soft rag dipped in petrol.

Washing and Polishing.

When washing the car, commence from the top and work downwards, using a slow flood of water and then leather off all the surplus moisture. After washing and drying, use a good quality cellulose polish which will not only impart a brilliant lustre to the surface of the cellulose but will help to preserve it from atmospheric corrosion. An occasional application of a good class wax polish will also help considerably in maintaining a smooth finish.

Seats.

Both the front and rear seats are upholstered in best quality hide and will not require any attention other than an occacional clean down with a cloth moistened in water.

Chromium.

Wash chromium plating with soap and warm water. On no account use metal polish.

Other attentions.

Door locks, hinges and other small working parts should be given a drop of oil occasionally and be checked for security. Sliding seat runners will benefit if periodically smeared with grease.

Front Seat Adjustment.

Provision is made for 'fore and aft' adjustment of the front seats. Adjustment is effected by pushing the control lever, located beneath the seat in a left handed direction, easing the seat backward or forward as required. To ensure that the seat is properly located, check that the trigger on the adjustment lever is located in one of the adjustment apertures.

Spare Wheel Valve.

Access to spare wheel valve is obtained through hole in rear of boot floor.

TOOL KIT.

The following tool kit is supplied with the car :—

$\frac{1}{8}$ in. × $\frac{3}{16}$ in Whitworth D/E Spanner.
$\frac{1}{4}$ in. × $\frac{5}{16}$ in. ,, ,, ,,
$\frac{3}{8}$ in. × $\frac{7}{16}$ in. ,, ,, ,,
$\frac{3}{16}$ in. × $\frac{1}{4}$ in. Whitworth Box Spanner.
$\frac{5}{16}$ in. × $\frac{3}{8}$ in. ,, ,, ,,
$\frac{7}{16}$ in. × $\frac{1}{2}$ in. ,, ,, ,,
Tommy Bar.
Screw Driver.
Combination pliers.
4 in. Adjustable spanner.
Wheelbrace.
Starting handle and bracket.
Bevelift Jack.
Tool Wrap.
Combination hammer is supplied when wire wheels are fitted.

N.B. When it is necessary to use the starting handle the bracket supplied must be attached to the front bumper by means of the two innermost bumper stud nuts.

EQUIPMENT.

JENSEN MOTORS LTD., accept no liability for tyres, instruments, electrical equipment and any other accessories fitted to the car which are not of their manufacture. All claims relating to any of these parts, or orders for repair to them should be addressed to their respective manufacturers from whom further information may be obtained on application to the addresses quoted below.

Important.

When claims are being made under guarantee it is essential to quote the car number which is stamped on a plate located under the bonnet on the side of the scuttle and the date on which the car was commissioned.

Brakes and Dampers.

Messrs. Girling Ltd., Kings Road, Tyseley, Birmingham 11.

Brake Servo System.

Messrs. Clayton Dewandre Co. Ltd., Titanic Works, Lincoln.

Electrical Equipment.

Joseph Lucas (Electrical) Ltd., Great Hampton Street, Birmingham 18, and Dordrecht Road, Acton Vale, London, W.3.

Engine Oil Filter.

Tecalemit Limited, Great West Road, Brentford, Middlesex.

Instruments.

S. Smith & Sons (M.A.) Ltd., Cricklewood Works, London, N.W.2.

Tyres.

Dunlop Rubber Co. Ltd., Fort Dunlop, Birmingham, and
1, Albany Street, London, N.W.1.

Tools.

Abingdon King Dick Ltd., Abingdon Works, Kings Road, Tyseley, Birmingham 11.

Lift Jack.

Smiths Jacking Systems Ltd., Jackall Works, Edgware Road, London, N.W.2.

Door Handles and Keys.

Willmot Breeden Ltd., Eastern Works, Camden Street, Birmingham 1.

Carburetters.

S.U. Carburetters Ltd., Erdington, Birmingham.

Air Filters and Exhaust Silencers.

Burgess Products Co. Ltd., Brookfield Road, Hinckley, Leics.

OPTIONAL EQUIPMENT.

Overdrive.

Special head and twin exhaust system.

Rev. Counter.

Screenwasher.

Heater.

15 in. Centre lock wire wheels with Dunlop road speed tyres 6.40×15.

Dunlop Road Speed tyres 5.50×16 on standard wheels.

Al-fin Drums.

CABIN HEATER (Optional Extra).

The Smiths heater and defroster unit is of 3 kilowatts nominal output. This unit utilises waste heat from the engine and is located under the facia on the L.H. side of the car.

A resistance is fitted in the heater which is controlled by a 3 position switch on the facia. First pull of switch gives ½ speed, second pull and turn gives full speed, at which maximum heat is obtained.

The heater unit draws fresh air from outside the car and this may be cut off by closing sliding door on L.H. side of bulkhead. Hot air is ducted from the heater to the Drivers side of the car and is controlled by opening a door underneath the facia. A similar door is fitted to the heater unit itself which when open will permit hot air to be directed into the vicinity of the passengers feet.

At speeds above 30 miles per hour the motor is not necessary owing to the ram effect in the air intake.

In summer it is usually desirable to turn off the cylinder head valve to permit the heating system to be used for the circulation of fresh unheated air throughout the car interior. This valve is located on the right hand side of the cylinder head and must be screwed fully home in a clockwise direction to shut off the supply of water to the heater radiator.

INDEX

LUCAS
ELECTRICAL EQUIPMENT

JENSEN "541" SALOON CARS
(1955)
HOME AND EXPORT MODELS

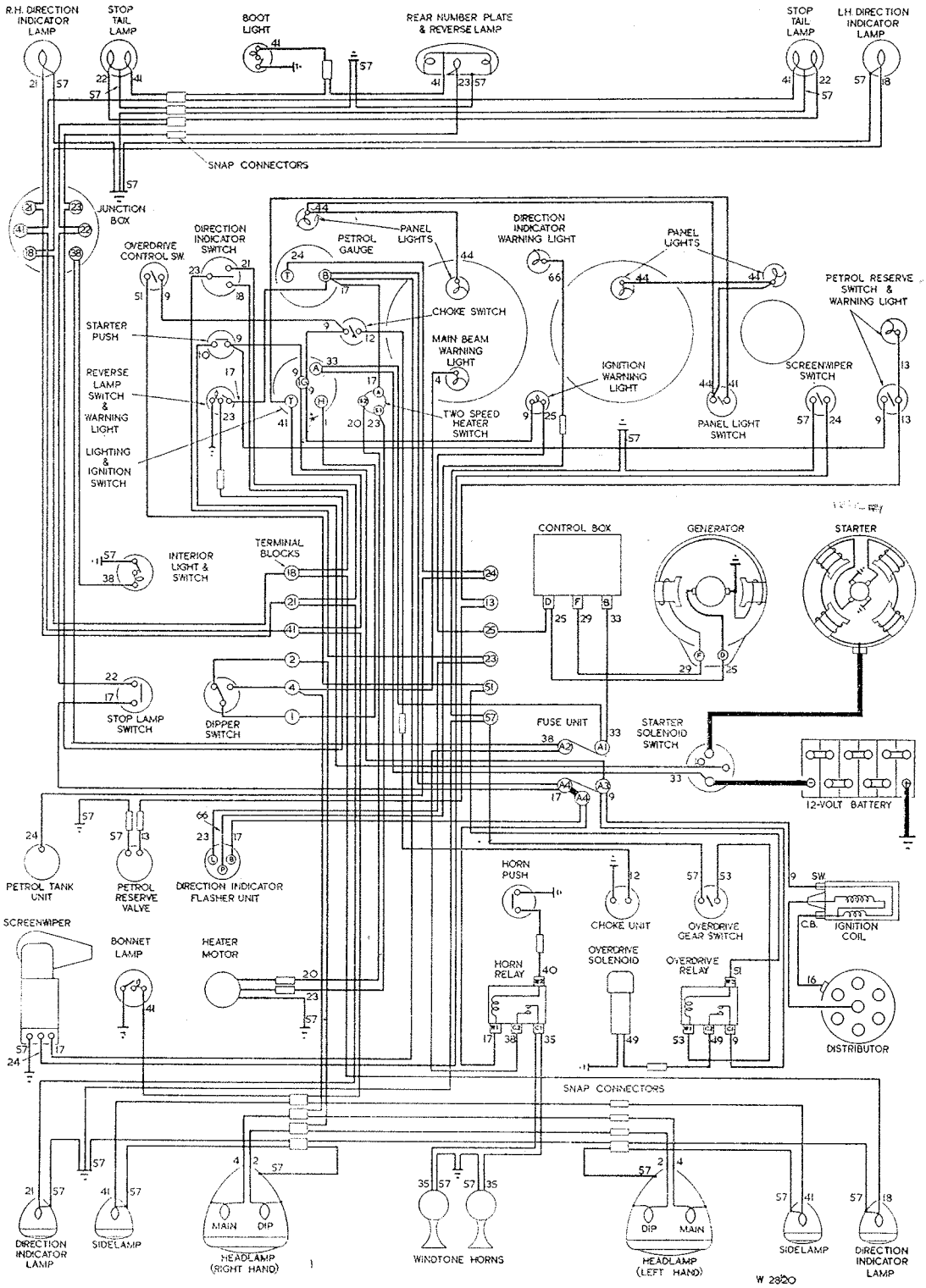

KEY TO CABLE COLOURS

1 BLUE				**54 PURPLE with GREEN**
2 BLUE with RED	15 WHITE with BROWN	28 YELLOW with WHITE	41 RED	**55 PURPLE with BROWN**
3 BLUE with YELLOW	16 WHITE with BLACK	29 YELLOW with GREEN	42 RED with YELLOW	**56 PURPLE with BLACK**
4 BLUE with WHITE	17 GREEN	30 YELLOW with PURPLE	43 RED with BLUE	57 BLACK
5 BLUE with GREEN	18 GREEN with RED	31 YELLOW with BROWN	44 RED with WHITE	58 BLACK with RED
6 BLUE with PURPLE	19 GREEN with YELLOW	32 YELLOW with BLACK	45 RED with GREEN	59 BLACK with YELLOW
7 BLUE with BROWN	20 GREEN with BLUE	33 BROWN	46 RED with PURPLE	60 BLACK with BLUE
8 BLUE with BLACK	21 GREEN with WHITE	34 BROWN with RED	47 RED with BROWN	61 BLACK with WHITE
9 WHITE	22 GREEN with PURPLE	35 BROWN with YELLOW	48 RED with BLACK	62 BLACK with GREEN
10 WHITE with RED	23 GREEN with BROWN	36 BROWN with BLUE	49 PURPLE	63 BLACK with PURPLE
11 WHITE with YELLOW	24 GREEN with BLACK	37 BROWN with WHITE	50 PURPLE with RED	64 BLACK with BROWN
12 WHITE with BLUE	25 YELLOW	38 BROWN with GREEN	51 PURPLE with YELLOW	65 DARK GREEN
13 WHITE with GREEN	26 YELLOW with RED	39 BROWN with PURPLE	52 PURPLE with BLUE	66 LIGHT GREEN
14 WHITE with PURPLE	27 YELLOW with BLUE	40 BROWN with BLACK	53 PURPLE with WHITE	

WIRING DIAGRAM
No. W28120
12-VOLT

ISSUED:
MARCH 1955

F/355/L

NUMBERS INDICATE CABLE IDENTIFICATION COLOURS, SEE KEY ABOVE

Printed in England